Drawing ID: 1203-608-100
Description: 1203 PCB Mounting Hole Dimensions

PCB Not to Scale

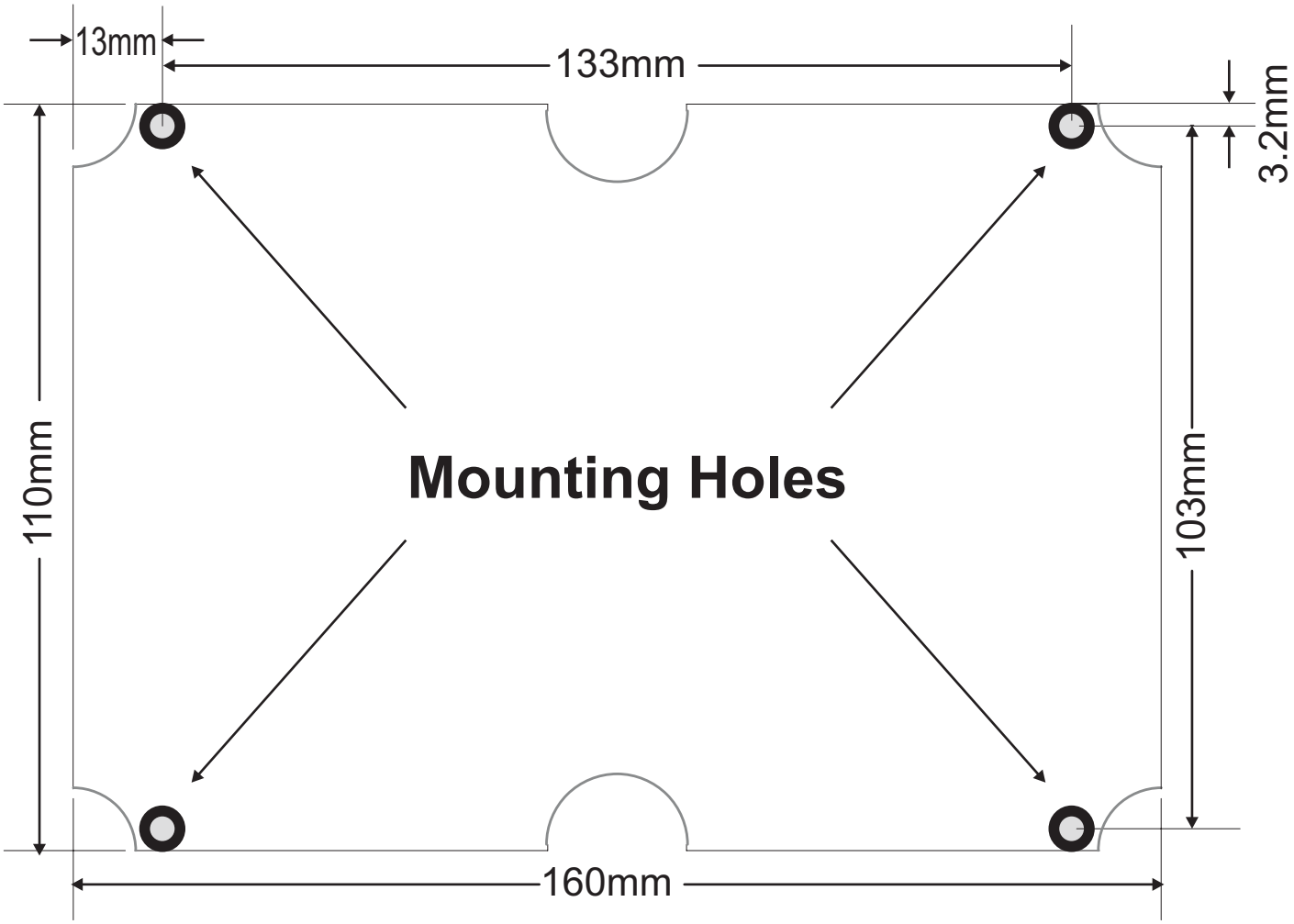

Mounting Holes suit M3 Fasteners

RINSTRUM PTY LTD
41 Success Street Acacia Ridge QLD 4110 AUSTRALIA
PO Box 300 Archerfield QLD 4108 AUSTRALIA
Telephone: + 61 7 3216 7166 Facsimile: + 61 7 3216 6211
Email: sales@rinstrum.com www.rinstrum.com

Copyright ©2003 Rinstrum Pty Ltd ABN 36 056 392 511